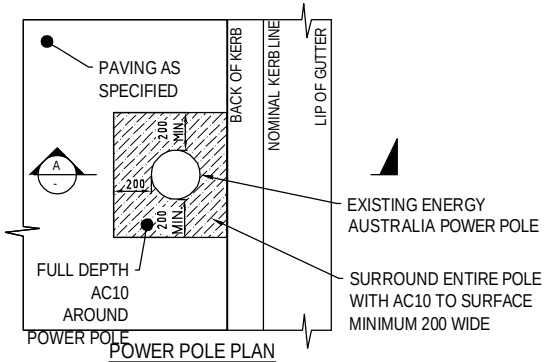

POWER POLE PLAN

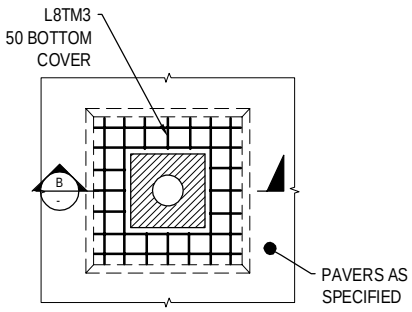

STREET LIGHT PLAN

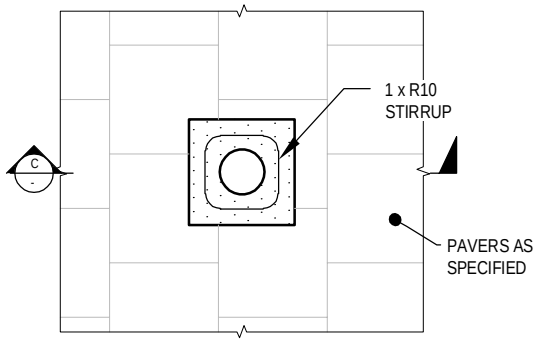

TRAFFIC SIGNAL PLAN

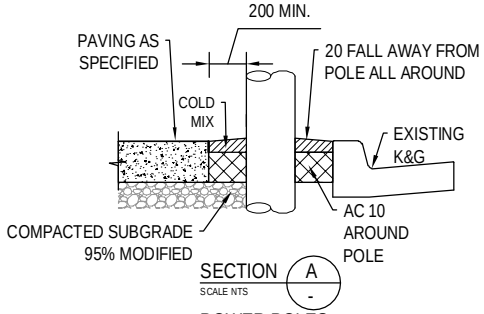

POWER POLES:
FOOTPAVING TREATMENT

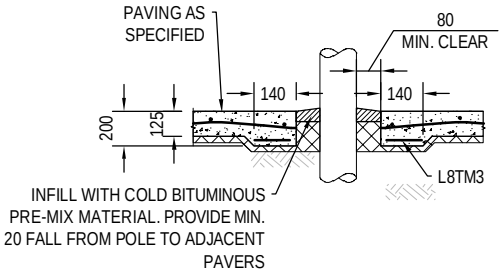

LIGHT POLES:
FOOTPAVING TREATMENT

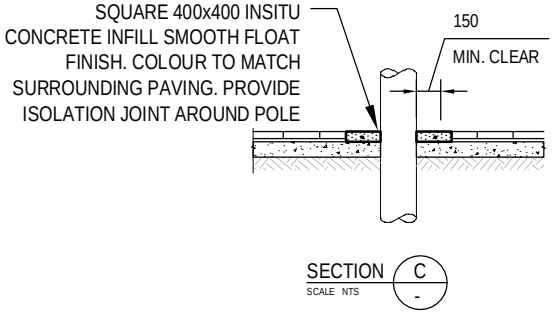

TRAFFIC SIGNALS:
FOOTPAVING TREATMENT

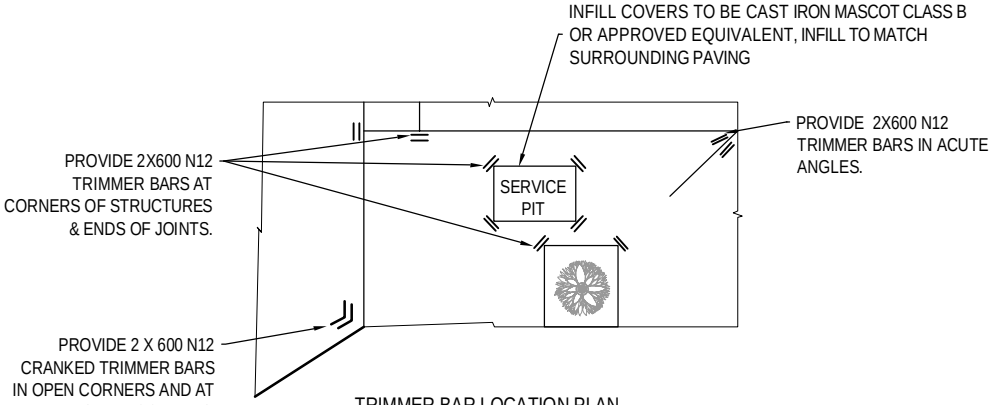

TRIMMER BAR LOCATION PLAN
IN CONCRETE SLABS

POLES ARE TO BE LOCATED CLEAR OF ALL GARDEN BEDS, TREE PITS AND PERMEABLE PAVING SURROUNDS.

ALL DIMENSIONS ARE IN MILLIMETRES UNLESS NOTED OTHERWISE.

CANTERBURY BANKSTOWN	CITY OF CANTERBURY BANKSTOWN	STD DWG N°
	STANDARD FOOTPAVING TREATMENT AT POLES AND STRUCTURES	S-031
		Sheet N°: 1 of 1 / Revision: 9/02/2026
	TYPICAL DETAILS	File Name: S-031

U:\Standard Drawings\Standard Drawings - Draft\Brand LOGO update\S-031.dwg 10 Mar. 2026 8:57 am